FMH S1/12H F1 B RL

Weidmüller Interface GmbH & Co. KG
Klingenbergstraße 26
D-32758 Detmold
Germany

www.weidmueller.com

Product image





OMNIMATE® - Board-to-Board connectors
Flexible engineering of compact devices
The use of future-proof contact systems, as well as the optimisation of manufacturing processes, are increasingly important in the development of efficient industrial devices, especially in the field of Industry 4.0. OMNIMATE® board-to-board connectors feature a 1.27 mm pitch and offer maximum flexibility due to different designs.

- **Flexible device design** - Industrial suitable density combined with high flexible connection combinations (Mezzanine, Mother-to-Daughter, Extender-card, Cable-to-Board)
- **Automation-Ready** - Developed for automatic assembly with high precise pin coplanarity and SMT-fixation
- **Reliable contact** - Up to 500 mating cycles due to industry suitable gold-surface (PdNi-Au)
- **Process-Ready** - High performance LCP material for reflow soldering
- **Scalability** - Different heights with high contact overlapping ensure various solutions from 12 – 80 poles.
- **Robust miniaturisation** - simple and safe connection even possible under unfavorable mating conditions – e.g. inclination or offset.

General ordering data

Version	PCB plug-in connector, male header, SMD solder connection, Pitch in mm (P): 1.27 mm, Number of poles: 12, 90°, Tape
Order No.	2747160000
Type	FMH S1/12H F1 B RL
GTIN (EAN)	4064675001089
Qty.	560 pc(s).
Product data	IEC: / 2.8 A UL: 150 V
Packaging	Tape

FMH S1/12H F1 B RL

Weidmüller Interface GmbH & Co. KG
Klingenbergstraße 26
D-32758 Detmold
Germany

www.weidmueller.com

Technical data

Dimensions and weights

Depth	10.6 mm	Depth (inches)	0.417 inch
Height	4.25 mm	Height (inches)	0.167 inch
Width	12.7 mm	Width (inches)	0.5 inch
Net weight	2.954 g		

System specifications

Product family	OMNIMATE Signal - Board-to-Board	Type of connection	Board connection
Mounting onto the PCB	SMD solder connection	Pitch in mm (P)	1.27 mm
Pitch in inches (P)	0.05 "	Outgoing elbow	90°
Number of poles	12	Number of solder pins per pole	1
Coplanarity:	0.1 mm	Number of rows	1
Pin series quantity	2	Protection degree	IP20
Volume resistance	<25 mΩ	Plugging cycles	500
Plugging force/pole, max.	0.6 N	Pulling force/pole, max.	0.6 N

Material data

Insulating material	LCP	Colour	black
Colour chart (similar)	RAL 9011	Insulating material group	IIIa
Insulation strength	≥ 10^{10} Ω	Moisture Level (MSL)	1
UL 94 flammability rating	V-0	Contact base material	Copper alloy
Contact material	Cu-alloy	Contact surface	Gold over nickel
Layer structure of plug contact	≥ 2 µm Ni / ≥ 0.4 µm PdNi / ≥ 0.05 µm Au	Storage temperature, min.	-40 °C
Storage temperature, max.	70 °C	Operating temperature, min.	-55 °C
Operating temperature, max.	125 °C		

Rated data acc. to IEC

Rated current, min. number of poles (Tu=20°C)	2.8 A	Clearance, min.	0.4 mm
Creepage distance, min.	0.4 mm		

Rated data acc. to UL 1977

Reference to approval values	Specifications are maximum values, details - see approval certificate.	Rated voltage (UL 1977) (obsolete)	150 V

Packing

Packaging	Tape	VPE length	370 mm
VPE width	348 mm	VPE height	154 mm

Classifications

ETIM 6.0	EC002637	ETIM 7.0	EC002637
ETIM 8.0	EC002637	ETIM 9.0	EC002637
ECLASS 9.0	27-44-04-02	ECLASS 9.1	27-44-04-02
ECLASS 10.0	27-44-04-02	ECLASS 11.0	27-46-02-01
ECLASS 12.0	27-46-02-01	ECLASS 13.0	27-46-02-01
ECLASS 14.0	27-46-02-01		

FMH S1/12H F1 B RL

Weidmüller Interface GmbH & Co. KG
Klingenbergstraße 26
D-32758 Detmold
Germany

www.weidmueller.com

Technical data

Environmental Product Compliance

REACH SVHC	/
RoHS Compliance Status	Compliant without exemption

Important note

IPC conformity	Conformity: The products are developed, manufactured and delivered according international recognized standards and norms and comply with the assured properties in the data sheet resp. fulfill decorative properties in accordance with IPC-A-610 "Class 2". Further claims on the products can be evaluated on request.

Approvals

Approvals	
ROHS	Conform
UL File Number Search	UL Website
Certificate No. (cURus)	E92202

Downloads

Engineering Data	CAD data – STEP
Catalogues	Catalogues in PDF-format

FMH S1/12H F1 B RL

Weidmüller Interface GmbH & Co. KG
Klingenbergstraße 26
D-32758 Detmold
Germany

www.weidmueller.com

Drawings

Product image

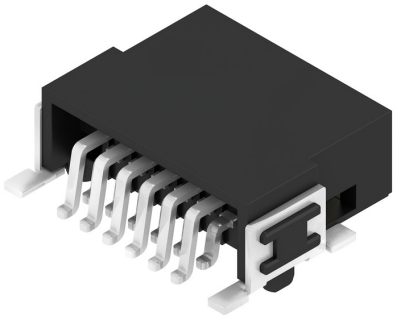

Dimensional drawing

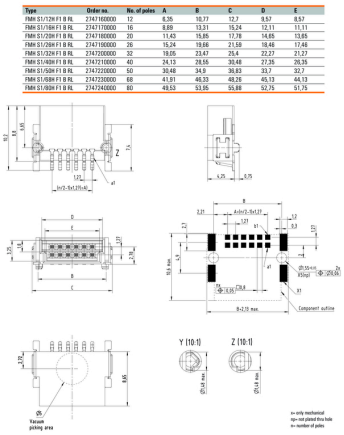

Detailed drawing

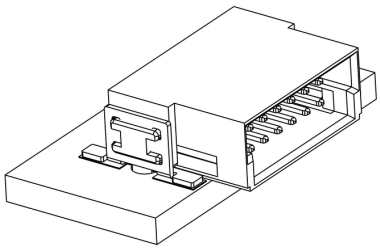

Derating curve

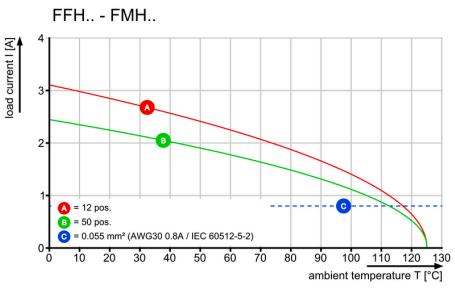

FMH S1/12H F1 B RL

Weidmüller Interface GmbH & Co. KG
Klingenbergstraße 26
D-32758 Detmold
Germany

www.weidmueller.com

Drawings

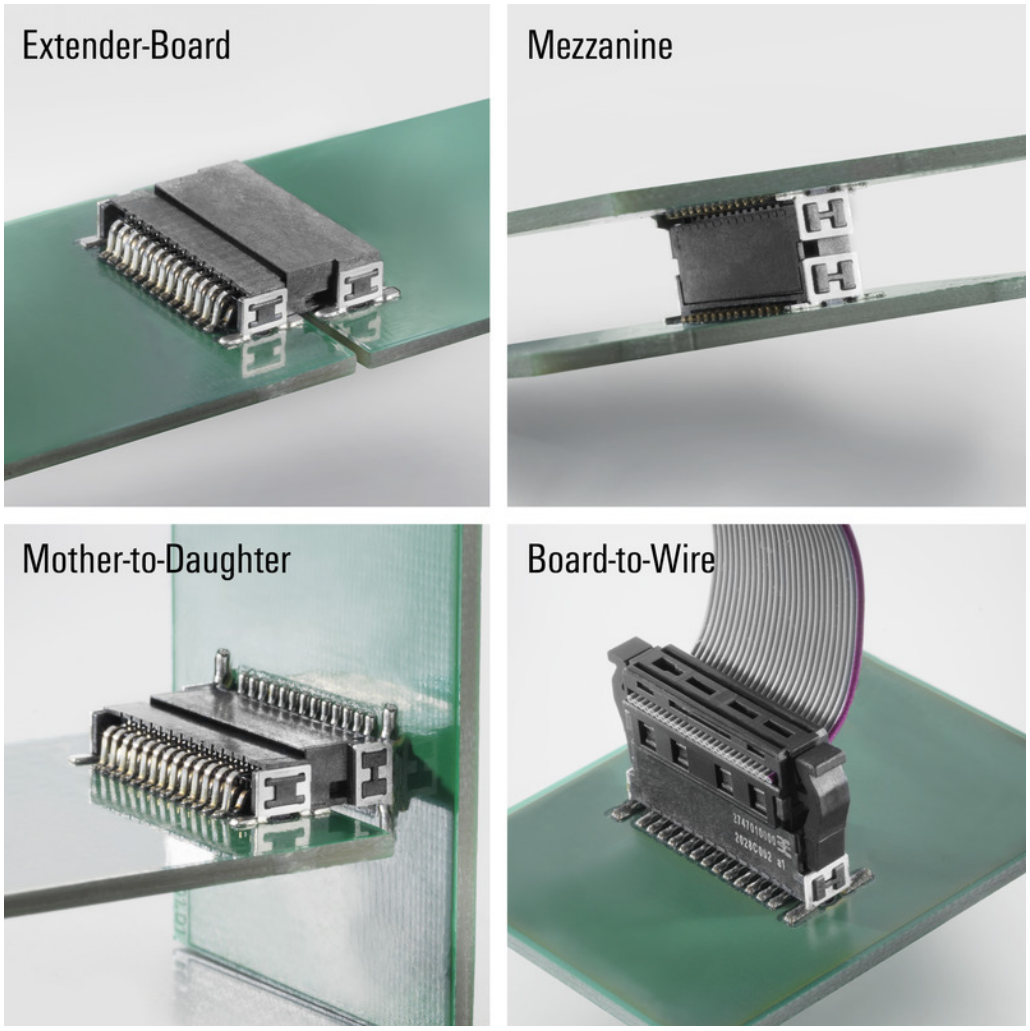

FMH S1/..H F1 B RL

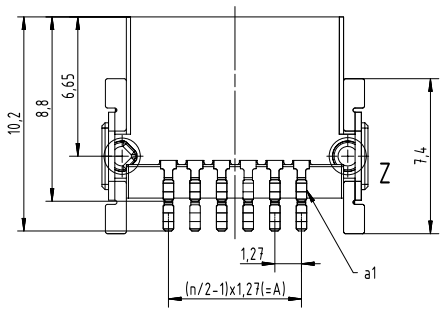

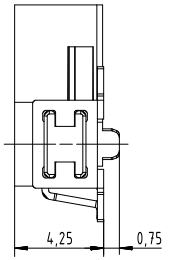

Type	Order no.	No. of poles	A	B	C	D	E
FMH S1/12H F1 B RL	2747160000	12	6,35	10,77	12,7	9,57	8,57
FMH S1/16H F1 B RL	2747170000	16	8,89	13,31	15,24	12,11	11,11
FMH S1/20H F1 B RL	2747180000	20	11,43	15,85	17,78	14,65	13,65
FMH S1/26H F1 B RL	2747190000	26	15,24	19,66	21,59	18,46	17,46
FMH S1/32H F1 B RL	2747200000	32	19,05	23,47	25,4	22,27	21,27
FMH S1/40H F1 B RL	2747210000	40	24,13	28,55	30,48	27,35	26,35
FMH S1/50H F1 B RL	2747220000	50	30,48	34,9	36,83	33,7	32,7
FMH S1/68H F1 B RL	2747230000	68	41,91	46,33	48,26	45,13	44,13
FMH S1/80H F1 B RL	2747240000	80	49,53	53,95	55,88	52,75	51,75

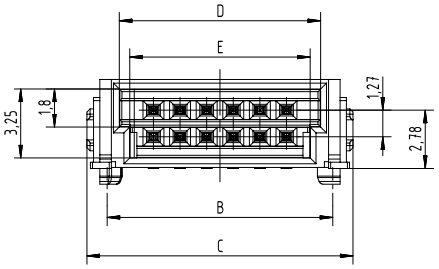

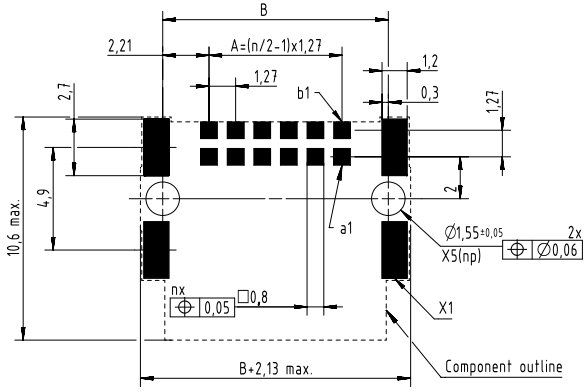

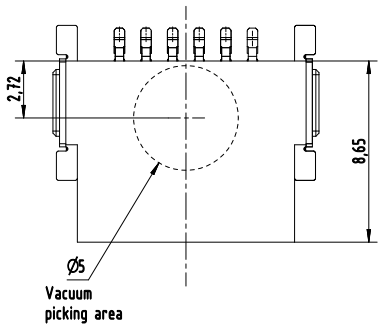

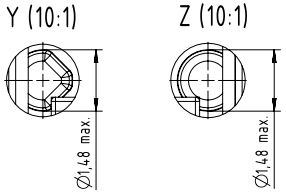

x= only mechanical
np= not plated thru hole
n= number of poles

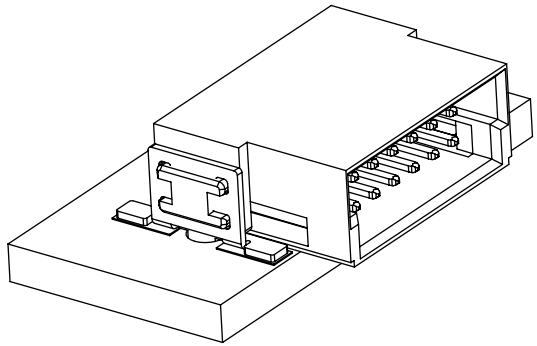

Male angled - FMH

Application - dimensions

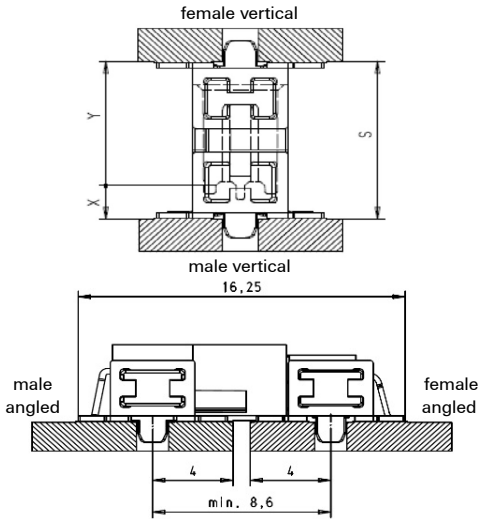

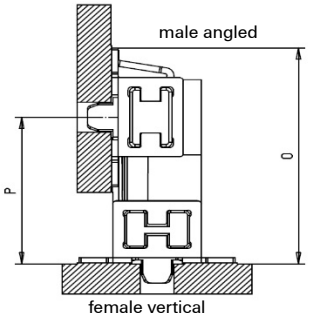

Y	P min.	O
9,05	10,5	14,33
6,25	7,7	11,53

Tape - dimensions

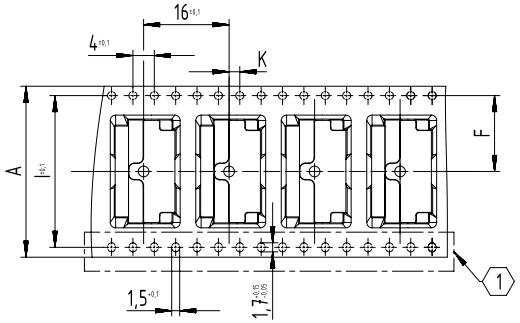

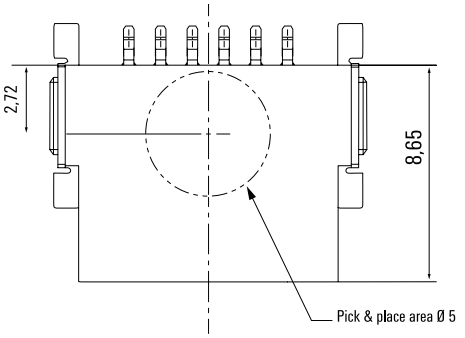

Tape dimensions	A	F	I	K
Poles 12	24,0 + 0,3/-0,1	11,5 ± 0,1	-	2 ± 0,1
Poles 14 to 20	32,0 ± 0,3	14,2 ± 0,1	28,4	2 ± 0,1
Poles 22 to 40	44,0 ± 0,3	20,2 ± 0,15	40,2	2 ± 0,15
Poles 42 to 56	56,0 ± 0,3	26,2 ± 0,15	52,4	2 ± 0,15
Poles 58 to 80	72,0 ± 0,3	34,2 ± 0,3	68,4	2 ± 0,2

(1) No double sprocket holes for 12 pole numbers (tape size 24)

Mating conditions

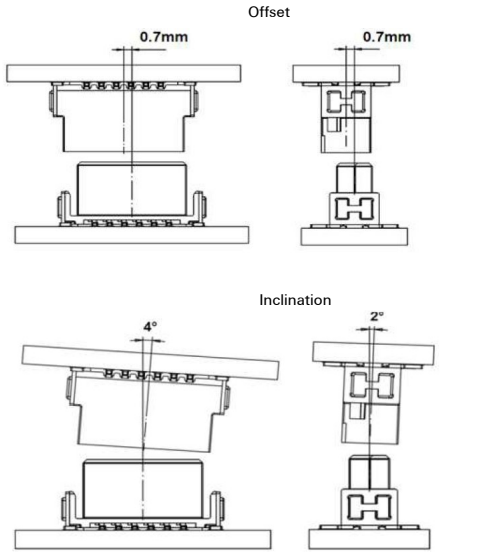

Reel - dimensions

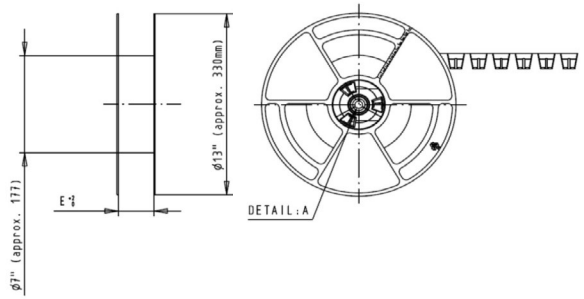

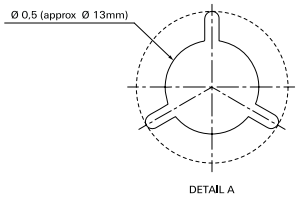

Reel dimensions	E
Poles 06 to12	24,4
Poles 14 to 20	32,4
Poles 22 to 40	44,4
Poles 42 to 56	56,4
Poles 58 to 80	72,4
Poles 82 to 100	88,4

Reflow Solder Profile

Recommended reflow soldering profile

Weidmüller Interface GmbH & Co. KG
Klingenbergstraße 16
D-32758 Detmold
Germany
Fon: +49 5231 14-0
Fax: +49 5231 14-292083
www.weidmueller.com

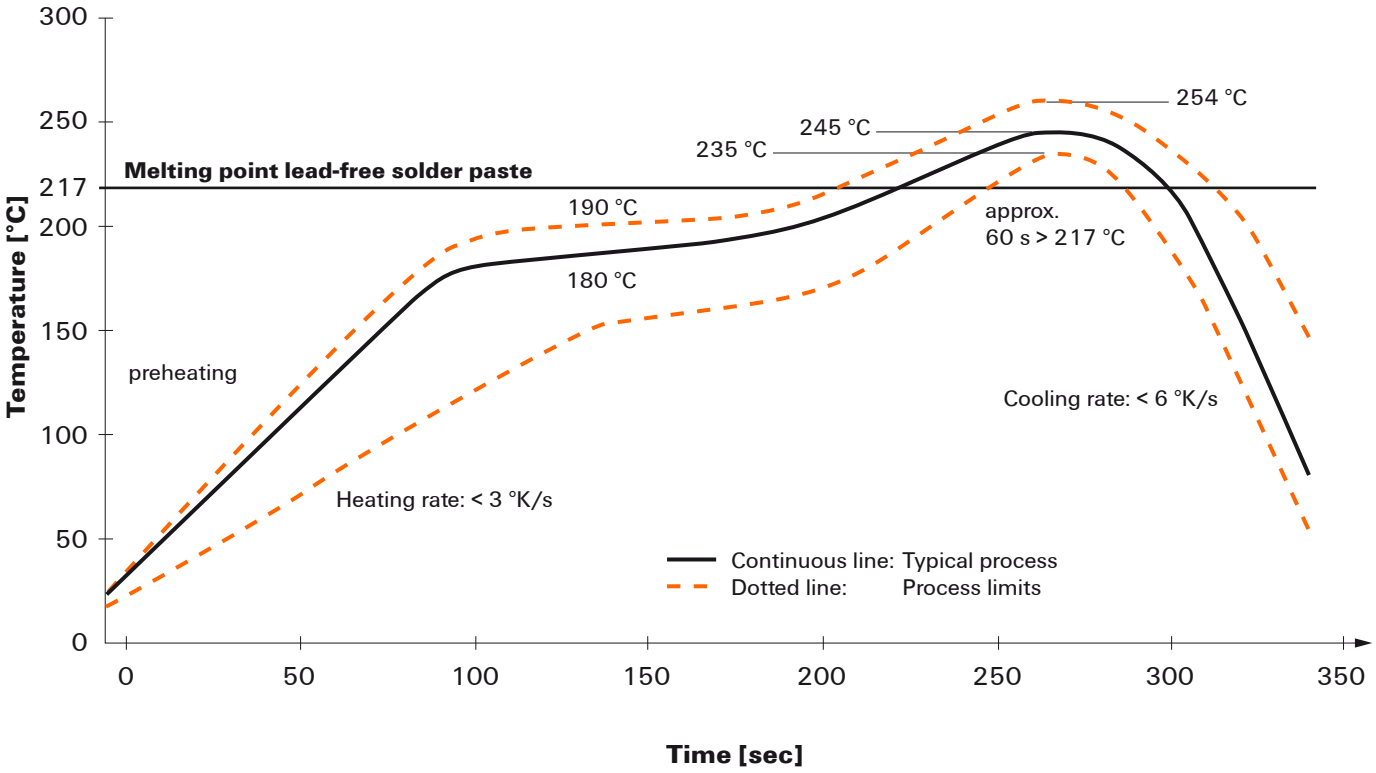

Reflow soldering profile

The perfect soldering profile for SMT Surface Mount Technology is one the most exiting question in SMT production. But there are more than one correct answer: The diagram of temperature-on-time is related to processing features of solder paste and to maximum load of components.

We have to consider the following parameters:
- Time for pre heating
- Maximum temperature
- Time above melting point
- Time for cooling
- Maximum heating rate
- Maximum cooling rate

We recommend a typical solder profile with associated process limits. With preheating components and board are prepared smoothly for the solder phase. Heating rate is typically ≤ +3K/s. In parallel the solder paste is ‚activated'. The time above melting point of 217°C the paste gets liquid and components and boards begin to connect. The maximum temperature of 245°C to 254°C should stay between 10 and 40 seconds. In the cooling phase at ≥ -6K/s solder is cured. Board and components cool down while avoiding cold cracks.

We reserve the right to make technical changes.