LMFV 5.00/10/90 3.5SN OR BX

Weidmüller Interface GmbH & Co. KG
Klingenbergstraße 26
D-32758 Detmold
Germany

www.weidmueller.com

Product image



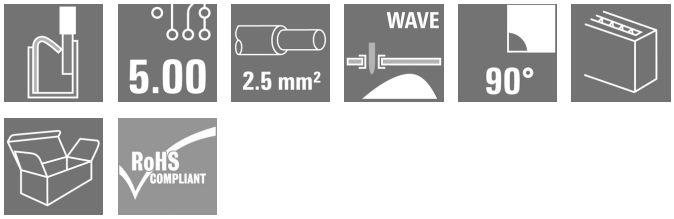

The innovative quick connector - simple, safe and economical:

PCB terminals with spring connection and direct PUSH IN technology. A milestone in connection technology.

Amazingly simple and simply amazing in practice:

- Connect and easily detach solid wires or wires with wire-end ferrules without using tools
- Potentials and clamping points marked clearly by coloured push buttons

World-class design-in and processing phases, and suitable for a vast range of applications.

General ordering data

Version	Printed circuit board terminals, 5.00 mm, Number of poles: 10, 90°, Solder pin length (l): 3.5 mm, tinned, orange, PUSH IN with actuator, Clamping range, max. : 2.5 mm², Box
Order No.	2786620000
Type	LMFV 5.00/10/90 3.5SN OR BX
GTIN (EAN)	4064675064183
Qty.	76 pc(s).
Product data	IEC: 630 V / 24 A / 0.2 - 2.5 mm² UL: 300 V / 15 A / AWG 24 - AWG 14
Packaging	Box

LMFV 5.00/10/90 3.5SN OR BX

Weidmüller Interface GmbH & Co. KG
Klingenbergstraße 26
D-32758 Detmold
Germany

www.weidmueller.com

Technical data

Dimensions and weights

Depth	10 mm	Depth (inches)	0.394 inch
Height	17.3 mm	Height (inches)	0.681 inch
Width	50.5 mm	Width (inches)	1.988 inch
Net weight	14 g		

System parameters

Product family	OMNIMATE Signal - series LMF	
Wire connection method	PUSH IN with actuator	
Mounting onto the PCB	THT solder connection	
Conductor outlet direction	90°	
Pitch in mm (P)	5 mm	
Pitch in inches (P)	0.197 "	
Number of poles	10	
Pin series quantity	1	
Number of rows	1	
Solder pin length (l)	3.5 mm	
Solder pin dimensions	0.95 x 0.8 mm	
Screwdriver blade	0.6 x 3.5	
Stripping length	8 mm	
Stripping length tolerance	min.	-1 mm
	max.	0 mm
L1 in mm	45 mm	
L1 in inches	1.77 "	
Touch-safe protection acc. to DIN VDE 0470	IP 20	
Touch-safe protection acc. to DIN VDE 57 106	Safe from finger touch	
Protection degree	IP20	

Material data

Insulating material	PA	Colour	orange
Colour chart (similar)	RAL 2000	Comparative Tracking Index (CTI)	≥ 600
UL 94 flammability rating	V-0	Contact material	Cu-alloy
Contact surface	tinned	Coating	4-8 µm SN
Layer structure of solder connection	4...8 µm Sn matt	Storage temperature, min.	-40 °C
Storage temperature, max.	70 °C	Operating temperature, min.	-40 °C
Operating temperature, max.	115 °C		

LMFV 5.00/10/90 3.5SN OR BX

Weidmüller Interface GmbH & Co. KG
Klingenbergstraße 26
D-32758 Detmold
Germany

www.weidmueller.com

Technical data

Conductors suitable for connection

Clamping range, min.	0.2 mm²	Clamping range, max.	2.5 mm²
Wire connection cross section AWG, min.	AWG 24	Wire connection cross section AWG, max.	AWG 14
Solid, min. H05(07) V-U	0.2 mm²	Solid, max. H05(07) V-U	2.5 mm²
Flexible, min. H05(07) V-K	0.2 mm²	Flexible, max. H05(07) V-K	2.5 mm²
w. plastic collar ferrule, DIN 46228 pt 4, min.	0.25 mm²	w. plastic collar ferrule, DIN 46228 pt 4, max.	1.5 mm²
w. wire end ferrule, DIN 46228 pt 1, min.	0.2 mm²	w. wire end ferrule, DIN 46228 pt 1, max.	1.5 mm²
Reference text	Length of ferrules is to be chosen depending on the product and the rated voltage., The outside diameter of the plastic collar should not be larger than the pitch (P)		

Rated data acc. to IEC

Rated current, min. number of poles (Tu=20°C)	24 A	Rated current, max. number of poles (Tu=20°C)	24 A
Rated current, min. number of poles (Tu=40°C)	24 A	Rated current, max. number of poles (Tu=40°C)	23.1 A
Rated voltage for surge voltage class / pollution degree II/2	630 V	Rated voltage for surge voltage class / pollution degree III/2	350 V
Rated voltage for surge voltage class / pollution degree III/3	250 V	Rated impulse voltage for surge voltage class/ pollution degree II/2	4 kV
Rated impulse voltage for surge voltage class/ pollution degree III/2	4 kV	Rated impulse voltage for surge voltage class/ contamination degree III/3	4 kV

Rated data acc. to UL 1059

Institute (UR)		Certificate No. (UR)	E60693
Rated voltage (Use group B / UL 1059)	300 V	Rated voltage (Use group D / UL 1059)	300 V
Rated current (Use group B / UL 1059)	15 A	Rated current (Use group D / UL 1059)	10 A
Wire cross-section, AWG, min.	AWG 24	Wire cross-section, AWG, max.	AWG 14
Reference to approval values	Specifications are maximum values, details - see approval certificate.		

Packing

Packaging	Box	VPE length	170 mm
VPE width	130 mm	VPE height	50 mm

Classifications

ETIM 6.0	EC002643	ETIM 7.0	EC002643
ETIM 8.0	EC002643	ETIM 9.0	EC002643
ECLASS 9.0	27-44-04-01	ECLASS 9.1	27-44-04-01
ECLASS 10.0	27-44-04-01	ECLASS 11.0	27-46-01-01
ECLASS 12.0	27-46-01-01	ECLASS 13.0	27-46-01-01
ECLASS 14.0	27-46-01-01		

LMFV 5.00/10/90 3.5SN OR BX

Weidmüller Interface GmbH & Co. KG
Klingenbergstraße 26
D-32758 Detmold
Germany

www.weidmueller.com

Technical data

Environmental Product Compliance

REACH SVHC	/
RoHS Compliance Status	Compliant without exemption

Important note

IPC conformity	Conformity: The products are developed, manufactured and delivered according international recognized standards and norms and comply with the assured properties in the data sheet resp. fulfill decorative properties in accordance with IPC-A-610 "Class 2". Further claims on the products can be evaluated on request.
Notes	• Additional variants on request • Rated current related to rated cross-section & min. No. of poles. • Wire end ferrule without plastic collar to DIN 46228/1 • Wire end ferrule with plastic collar to DIN 46228/4 • P on drawing = pitch • Rated data refer only to the component itself. Clearance and creepage distances to other components are to be designed in accordance with the relevant application standards. • The test point can only be used as potential-pickup point. • Long term storage of the product with average temperature of 50 °C and maximum humidity 70%, 36 months

Approvals

Approvals	
ROHS	Conform
UL File Number Search	UL Website
Certificate No. (UR)	E60693

Downloads

Engineering Data	CAD data – STEP
Catalogues	Catalogues in PDF-format

LMFV 5.00/10/90 3.5SN OR BX

Weidmüller Interface GmbH & Co. KG
Klingenbergstraße 26
D-32758 Detmold
Germany

www.weidmueller.com

Drawings

Dimensional drawing

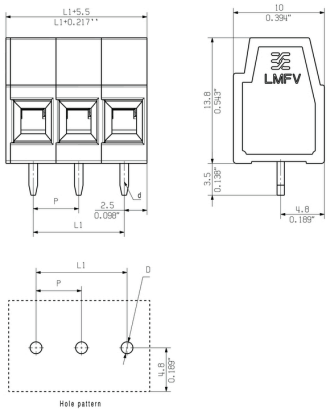

Derating curve

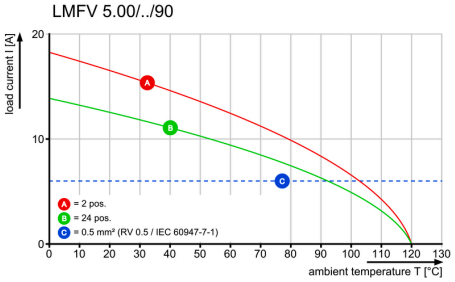

Derating curve

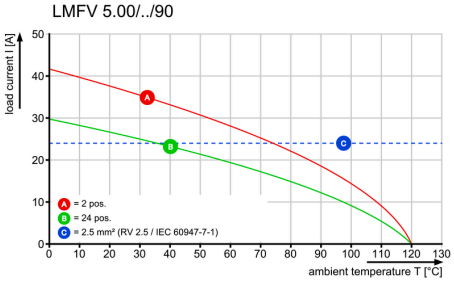

Wave Solder Profile

Recommended wave solderding profiles

Weidmüller Interface GmbH & Co. KG
Klingenbergstraße 16
D-32758 Detmold
Germany
Fon: +49 5231 14-0
Fax: +49 5231 14-292083
www.weidmueller.com

Single Wave:

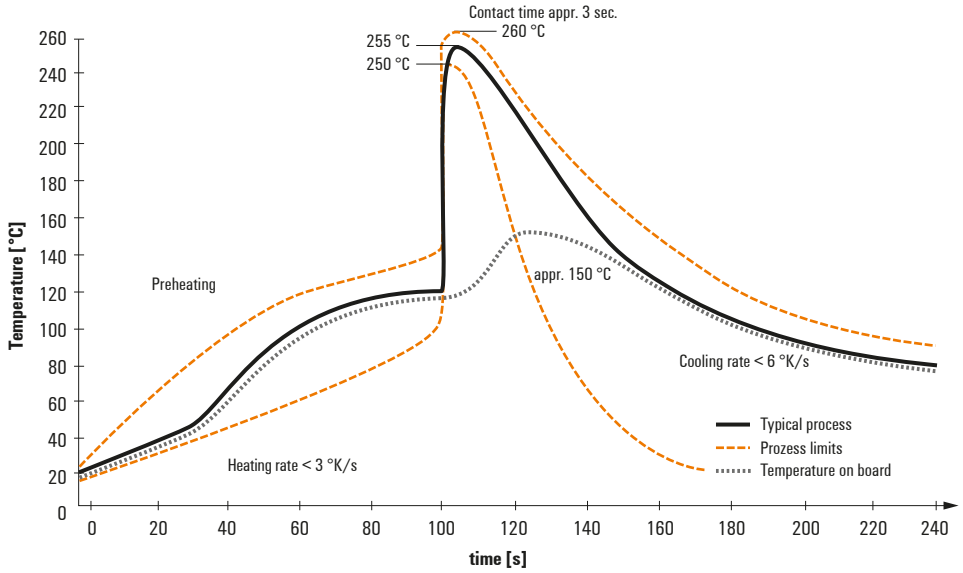

Double Wave:

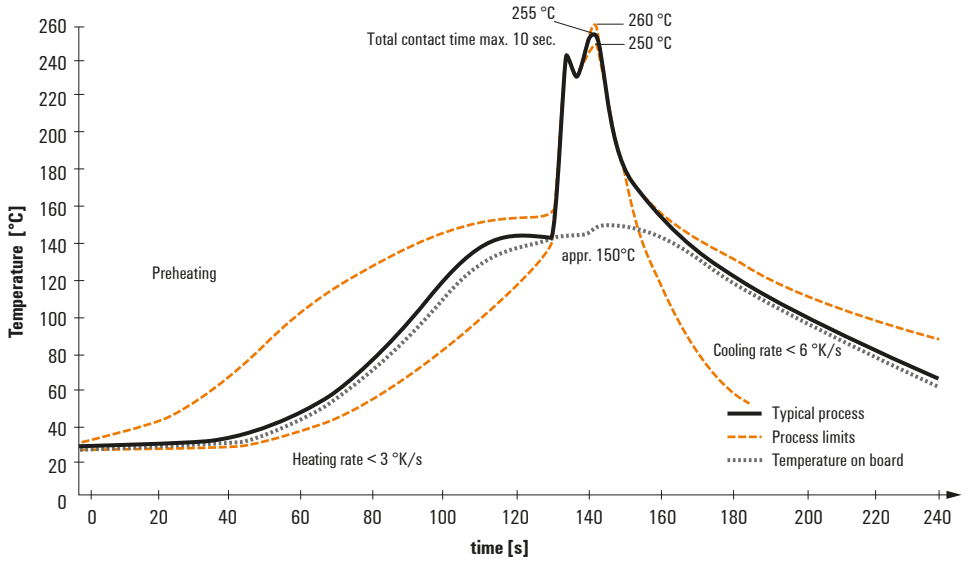

Wave soldering profiles

Wired connection elements should be processed in accordance with the DIN EN 61760-1 standard. We have included two recommendations for practical wave soldering profiles, with which Weidmüller PCB terminals and connectors are qualified.

When choosing a suitable profile for your application, the following factors also need to be considered:
- PCB thickness
- Proportion of Cu in the layers
- Single/double-sided assembly
- Product range
- Heating and cooling rates

The single and double wave profiles each indicate the recommended operating range, including the maximum soldering temperature of 260°C. In practice, the maximum soldering temperature is quite often well below the above maximum profile.

We reserve the right to make technical changes.