FC50 TN/12A S1 B BX

Weidmüller Interface GmbH & Co. KG
Klingenbergstraße 26
D-32758 Detmold
Germany

www.weidmueller.com

Product image



RoHS COMPLIANT

OMNIMATE® - Board-to-Board connectors
Flexible engineering of compact devices
The use of future-proof contact systems, as well as the optimisation of manufacturing processes, are increasingly important in the development of efficient industrial devices, especially in the field of Industry 4.0. OMNIMATE® board-to-board connectors feature a 1.27 mm pitch and offer maximum flexibility due to different designs.

- **Flexible device design** - Industrial suitable density combined with high flexible connection combinations (Mezzanine, Mother-to-Daughter, Extender-card, Cable-to-Board)
- **Automation-Ready** - Developed for automatic assembly with high precise pin coplanarity and SMT-fixation
- **Reliable contact** - Up to 500 mating cycles due to industry suitable gold-surface (PdNi-Au)
- **Process-Ready** - High performance LCP material for reflow soldering
- **Scalability** - Different heights with high contact overlapping ensure various solutions from 12 – 80 poles.
- **Robust miniaturisation** - simple and safe connection even possible under unfavorable mating conditions – e.g. inclination or offset.

General ordering data

Version	PCB plug-in connector, female plug, Pitch in mm (P): 1.27 mm, Number of poles: 12, Box
Order No.	2826930000
Type	FC50 TN/12A S1 B BX
GTIN (EAN)	4064675363538
Qty.	10 pc(s).
Product data	IEC: / 1.9 A UL:
Packaging	Box

FC50 TN/12A S1 B BX

Weidmüller Interface GmbH & Co. KG
Klingenbergstraße 26
D-32758 Detmold
Germany

www.weidmueller.com

Technical data

Dimensions and weights

Length	12.2 mm	Length (inches)	0.48 inch
Net weight	7.58 g		

System Parameters

Product family	OMNIMATE Signal - Board-to-Board	Type of connection	Insulation displacement connection (IDC)
Wire connection method	IDC terminal	Pitch in mm (P)	1.27 mm
Pitch in inches (P)	0.05 "	Conductor outlet direction	90°/270°
Number of poles	12	Number of rows	2
Pin series quantity	2	Protection degree	IP20
Volume resistance	<25 mΩ	Plugging cycles	500
Plugging force/pole, max.	0.6 N	Pulling force/pole, max.	0.6 N

Material data

Insulating material	LCP	Colour	grey
Colour chart (similar)	RAL 7035	Insulation strength	≥ 20 MΩ
Moisture Level (MSL)	1	UL 94 flammability rating	V-0
Contact base material	Copper alloy	Contact material	Cu-alloy
Contact surface	Ni/Au	Layer structure of plug contact	≥ 2 µm Ni / ≥ 0.4 µm PdNi / ≥ 0.05 µm Au
Storage temperature, min.	-40 °C	Storage temperature, max.	70 °C
Operating temperature, min.	-40 °C	Operating temperature, max.	125 °C

Conductors suitable for connection

Wire connection cross section AWG, min.	AWG 30/1, 30/7	Wire connection cross section AWG, max.	AWG 30/1, 30/7

Rated data acc. to IEC

Rated current, min. number of poles (Tu=20°C)	1.9 A	Clearance, min.	0.4 mm
Creepage distance, min.	0.4 mm		

Packing

Packaging	Box	VPE length	155 mm
VPE width	64 mm	VPE height	38 mm

Classifications

ETIM 6.0	EC002599	ETIM 7.0	EC002599
ETIM 8.0	EC002599	ETIM 9.0	EC002599
ECLASS 9.0	27-06-03-08	ECLASS 9.1	27-06-03-08
ECLASS 10.0	27-06-03-08	ECLASS 11.0	27-06-03-08
ECLASS 12.0	27-06-03-08	ECLASS 13.0	27-06-03-08
ECLASS 14.0	27-06-03-08		

Environmental Product Compliance

REACH SVHC	/
RoHS Compliance Status	Compliant without exemption

FC50 TN/12A S1 B BX

Weidmüller Interface GmbH & Co. KG
Klingenbergstraße 26
D-32758 Detmold
Germany

www.weidmueller.com

Technical data

Important note

IPC conformity	Conformity: The products are developed, manufactured and delivered according international recognized standards and norms and comply with the assured properties in the data sheet resp. fulfill decorative properties in accordance with IPC-A-610 "Class 2". Further claims on the products can be evaluated on request.

Approvals

ROHS	Conform

Downloads

Engineering Data	CAD data – STEP
Catalogues	Catalogues in PDF-format

FC50 TN/12A S1 B BX

Weidmüller Interface GmbH & Co. KG
Klingenbergstraße 26
D-32758 Detmold
Germany

www.weidmueller.com

Drawings

Product image

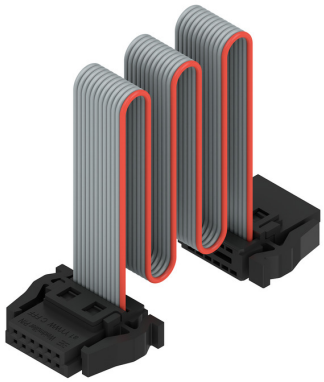

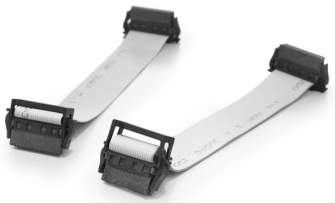

With optional strain relief



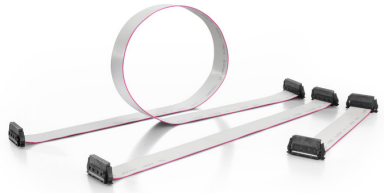

Three standard lengths (0.1 m, 0.2 m, and 0.5 m)

FC.. ../12A S1 B BX

1:1 wiring, 12 pole, different lengths and cable types

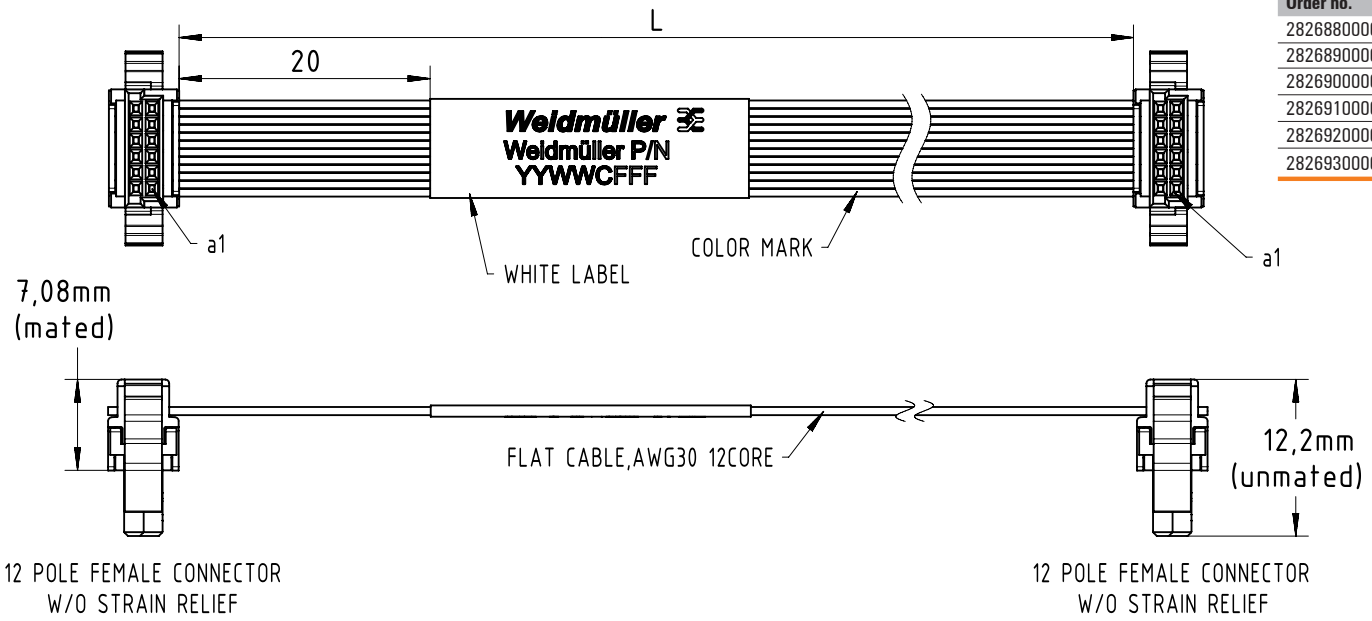

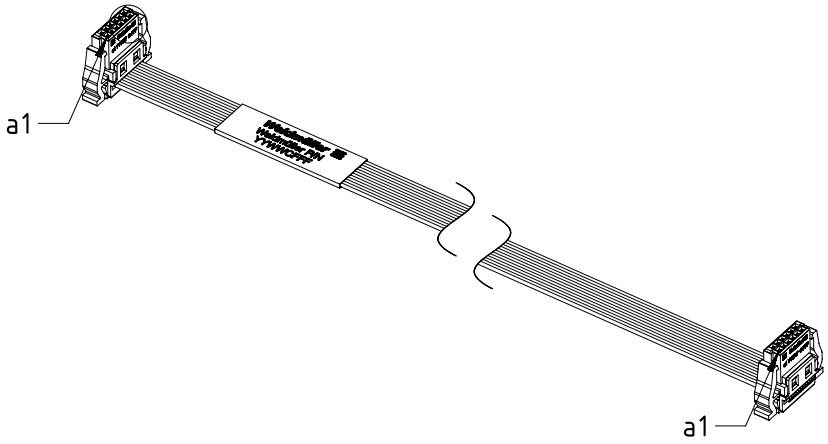

Order no.	Type	No. of poles	Cable Type	Cable Length
2826880000	FC10 PN/12A S1 B BX	12	PVC	100±5mm
2826890000	FC20 PN/12A S1 B BX	12	PVC	200±10mm
2826900000	FC50 PN/12A S1 B BX	12	PVC	500±10mm
2826910000	FC10 TN/12A S1 B BX	12	TPE	100±5mm
2826920000	FC20 TN/12A S1 B BX	12	TPE	200±10mm
2826930000	FC50 TN/12A S1 B BX	12	TPE	500±10mm