WIZ811MJ Datasheet

(Ver. 1.2)



©2013 WIZnet Co., Ltd. All Rights Reserved.
For more information, visit our website at www.wiznet.co.kr

Document History Information

Revision	Data	Description
Ver. 1.0	March 11, 2008	Release with WIZ811MJ Launching
Ver. 1.1	January 28, 2009	Added temperature specification
Ver. 1.2	January 25, 2013	Hardware revision(Rev1.1) Changed operation temperature range, Partlist and schematic as H/W revision.

WIZnet's Online Technical Support

If you have something to ask about WIZnet Products, Write down your question on Q&A Board in WIZnet website (www.wiznet.co.kr). WIZnet Engineer will give an answer as soon as possible.

© Copyright 2013 WIZnet Co., Ltd. All rights reserved

Table of Contents

1. Introduction 4

1.1. Features 4
1.2. Block Diagram 4
1.3. Difference between WIZ810MJ and WIZ811MJ 5

2. Pin Assignments & descriptions 6

2.1. Pin Assignments 6
2.2. Power & Ground 6
2.3. MCU Interfaces 7
2.4. Miscellaneous Signals 8

3. Timing Diagrams 9

3.1. Reset Timing 9
3.2. Register/Memory READ Timing 9
3.3. Register/Memory WRITE Timing 10
3.4. SPI Timing 10

4. Dimensions 11

5. Schematic 12

6. Partlist 13

© Copyright 2013 WIZnet Co., Ltd. All rights reserved

1. Introduction

WIZ811MJ is the network module that includes W5100 (TCP/IP hardwired chip, include PHY), MAG-JACK (RJ45 with X'FMR) with other glue logics. It can be used as a component and no effort is required to interface W5100 and Transformer. The WIZ811MJ is an ideal option for users who want to develop their Internet enabling systems rapidly.
For the detailed information on implementation of Hardware TCP/IP, refer to the W5100 Datasheet.

WIZ811MJ consists of W5100 and MAG-JACK.

- TCP/IP, MAC protocol layer: W5100
- Physical layer: Included in W5100
- Connector: MAG-JACK(RJ45 with Transformer)

1.1. Features

- Supports 10/100 Base TX
- Supports half/full duplex operation
- Supports auto-negotiation and auto cross-over detection
- IEEE 802.3/802.3u Compliance
- Operates 3.3V with 5V I/O signal tolerance
- Supports network status indicator LEDs
- Includes Hardware Internet protocols: TCP, IP Ver.4, UDP, ICMP, ARP, PPPoE, IGMP
- Includes Hardware Ethernet protocols: DLC, MAC
- Supports 4 independent connections simultaneously
- Supports MCU bus Interface and SPI Interface
- Supports Direct/Indirect mode bus access
- Supports Socket API for easy application programming
- Interfaces with two 2.54mm pitch 2 x 10 header pin
- Temperature :

  [PCB rev1.0] : 0 ~ 70℃ (Operation), -40 ~ 85℃ (Storage)
  [PCB rev1.1] : -40 ~ 85℃ (Operation), -40 ~ 85℃ (Storage)

1.2. Block Diagram

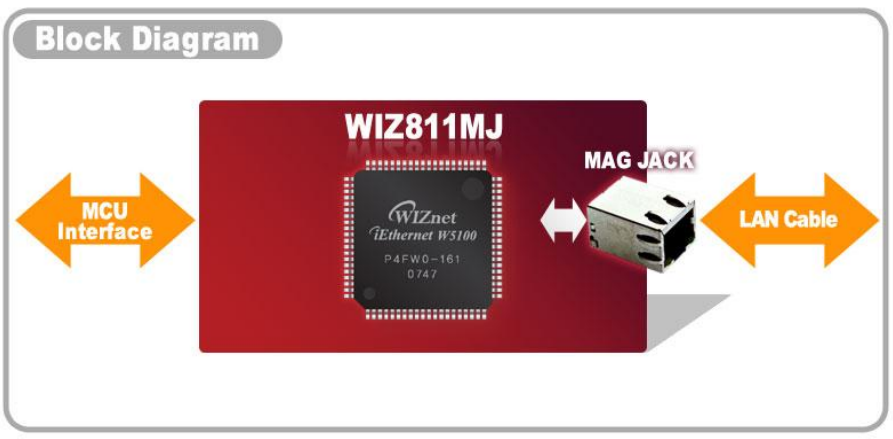

© Copyright 2013 WIZnet Co., Ltd. All rights reserved

1.3. Difference between WIZ810MJ and WIZ811MJ

WIZ810MJ	WIZ811MJ
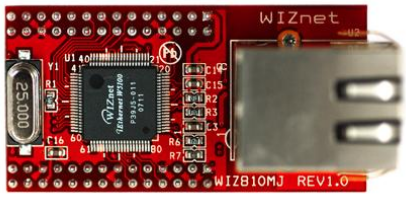	
Two 2mm pitch 14x2 header	Two 2.54mm pitch 10x2 header
Not has PCB through Hole	Two PCB Through Hole(Ø3.00mm)
52 x 25 x 21mm (W x H x D)	55.5 x 25 x 23.5mm (W x H x D)
Share SPI and BUS signal pin (need to control SPI_EN pin)	Separate SPI signal pin (SPI_EN controlled automatically by /SCS signal)

© Copyright 2013 WIZnet Co., Ltd. All rights reserved

2. Pin Assignments & descriptions

2.1. Pin Assignments

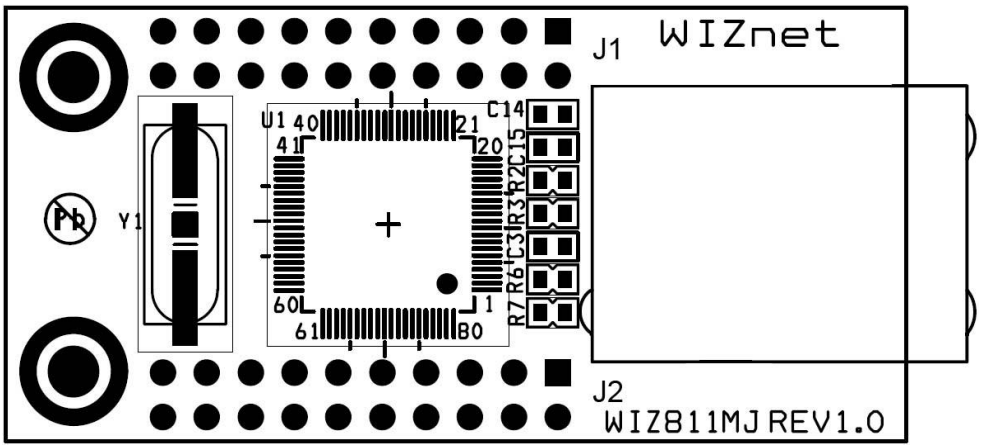

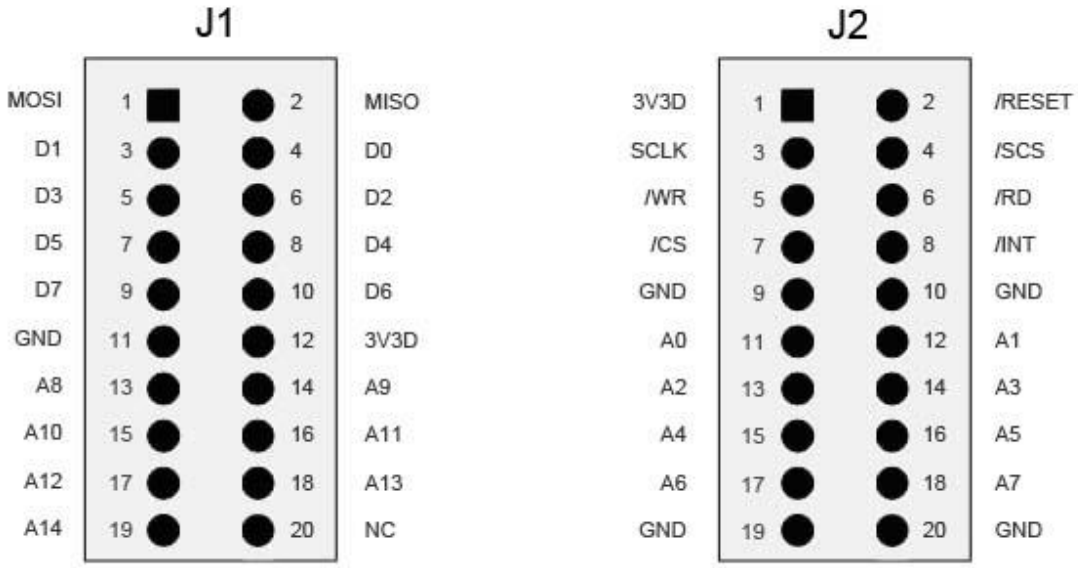

I : Input
I/O : Bi-directional Input and output
O : Output
P : Power

2.2. Power & Ground

Symbol	Type	Pin No.	Description
VCC	**P**	J1:12 , J2:1	**Power** : 3.3 V power supply
GND	**P**	J1:11, J2:9, J2:10, J2:19, J2:20	**Ground**

© Copyright 2013 WIZnet Co., Ltd. All rights reserved

2.3. MCU Interfaces

Symbol	Type	Pin No.	Description
SCLK	**I**	J2:3	**SCLK(Serial Clock)** This pin is used to SPI Clock Signal pin.
/SCS	**I**	J2:4	**/SCS (Slave Select)** * This pin is used to SPI Slave Select signal Pin. This pin controls SPI_EN signal of W5100. When /SCS signal assert low, W5100 drive SPI mode by SPI_EN signal toggled high.
MOSI	**I**	J1:1	**MOSI (Master Out Slave In)** * This pin is used to SPI MOSI signal pin.
MISO	**I/O**	J1:2	**MISO (Master In Slave Out)** * This pin is used to SPI MISO signal pin.
A14~A8	**I**	J1:13 ~ J1:19	**Address** Used as Address[14-8] pin
A7~A0	**I**	J2:11 ~ J2:18	**Address** Used as Address[7-0] pin
D7~D0	**I/O**	J1:3 ~ J1:10	**Data** 8 bit-wide data bus
/CS	**I**	J2:7	**Module Select** : Active low. /CS of W5100
/RD	**I**	J2:6	**Read Enable** : Active low. /RD of W5100
/WR	**I**	J2:5	**Write Enable** : Active low /WR of W5100
/INT	**O**	J2:8	**Interrupt** : Active low After reception or transmission it indicates that the W5100 requires MCU attention. By writing values to the Interrupt Status Register of W5100 the interrupt will be cleared. All interrupts can be masked by writing values to the IMR of W5100 (Interrupt Mask Register). For more details refer to the W5100 Datasheet

© Copyright 2013 WIZnet Co., Ltd. All rights reserved

2.4. Miscellaneous Signals

Symbol	Type	Pin No.	Description
/RESET	**I**	J2:2	**Reset :** This pin is active low input to initialize or re-initialize W5100. By asserting this pin low for at least 2us, all internal registers will be re-initialized to their default states.
NC	-	J1 : 20	Not Connect

© Copyright 2013 WIZnet Co., Ltd. All rights reserved

3. Timing Diagrams

WIZ811MJ provides following interfaces of W5100.
-. Direct/Indirect mode bus access
-. SPI access

3.1. Reset Timing

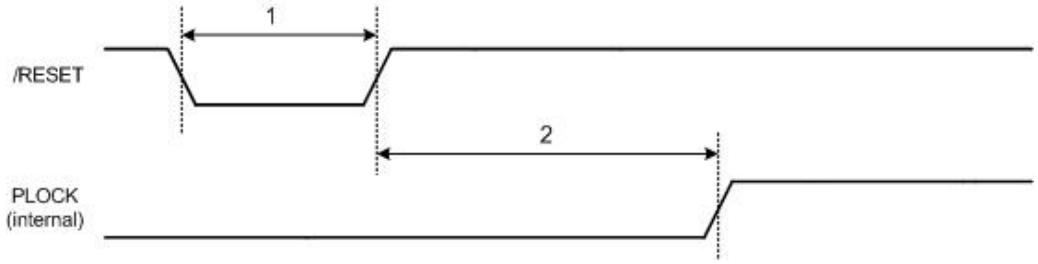

	Description	Min	Max
1	Reset Cycle Time	2 us	-
2	/RESET to internal PLOCK	-	10 ms

3.2. Register/Memory READ Timing

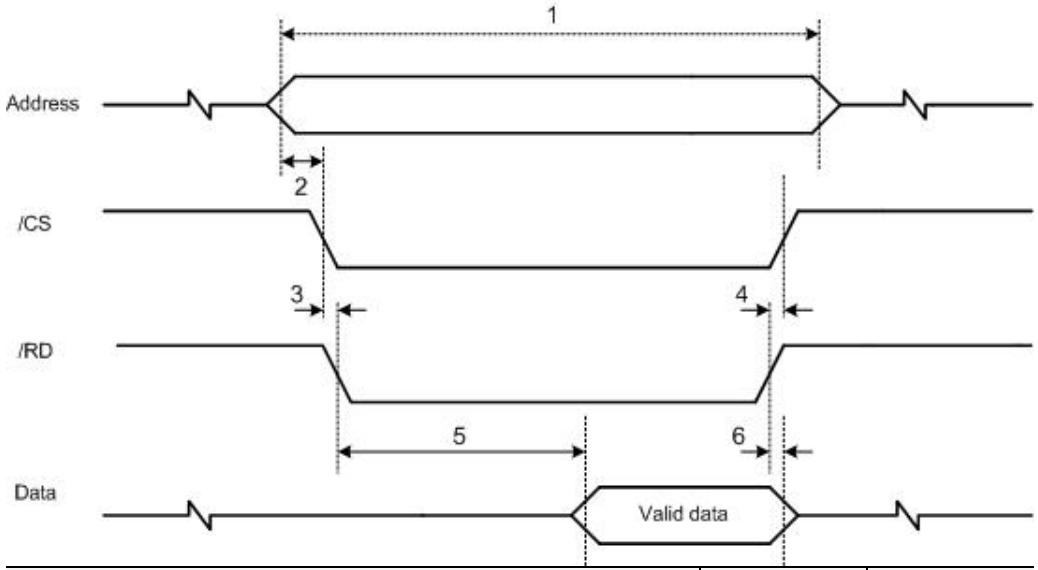

	Description	Min	Max
1	Read Cycle Time	80 ns	-
2	Valid Address to /CS low time	8 ns	-
3	/CS low to /RD low time	-	1 ns
4	/RD high to /CS high time	-	1 ns
5	/RD low to Valid Data Output time	-	80 ns
6	/RD high to Data High-Z Output time	-	1 ns

© Copyright 2013 WIZnet Co., Ltd. All rights reserved

3.3. Register/Memory WRITE Timing

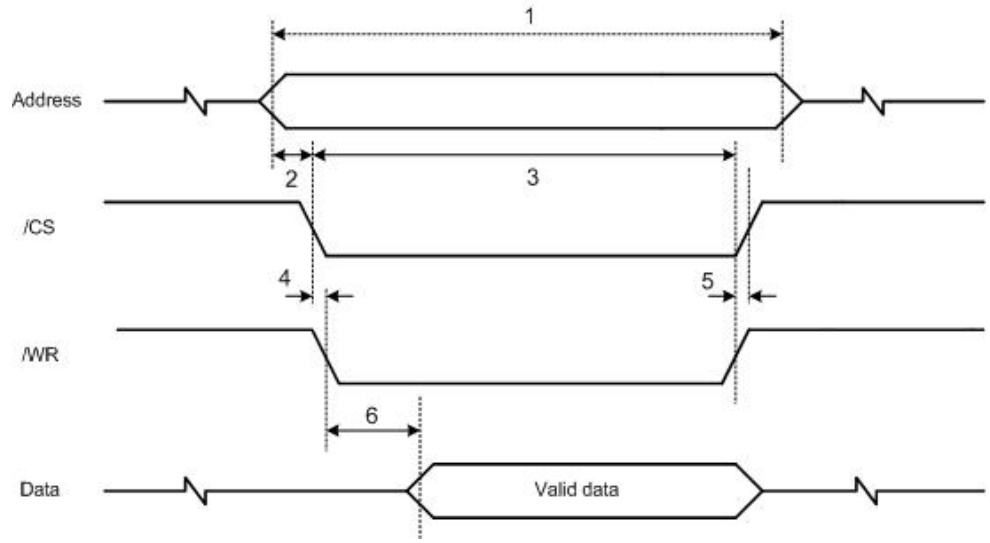

	Description	Min	Max
1	Write Cycle Time	70 ns	-
2	Valid Address to /CS low time	7 ns	-
3	/CS low to /WR high time	70 ns	-
4	/CS low to /WR low time	-	1 ns
5	/WR high to /CS high time	-	1 ns
6	/WR low to Valid Data time	-	14 ns

3.4. SPI Timing

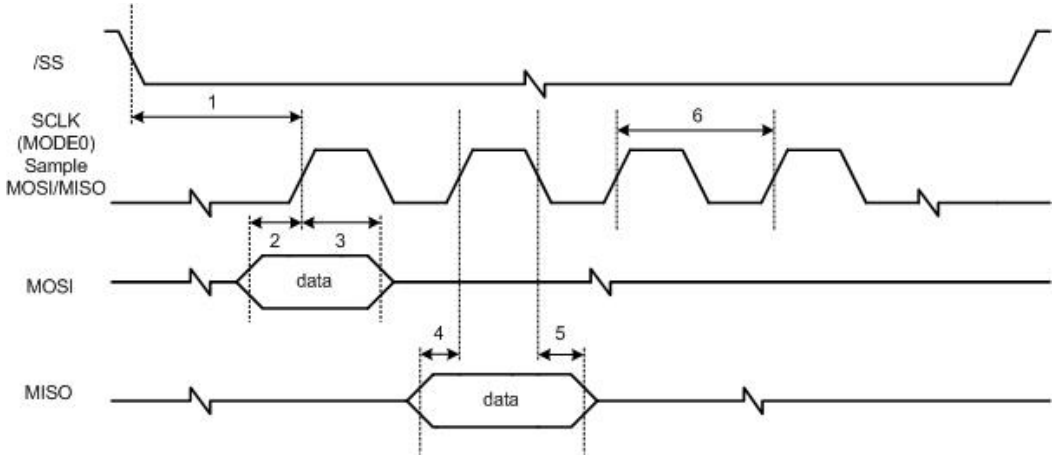

	Description	Mode	Min	Max
1	/SS low to SCLK	Slave	21 ns	-
2	Input setup time	Slave	7 ns	-
3	Input hold time	Slave	28 ns	-
4	Output setup time	Slave	7 ns	14 ns
5	Output hold time	Slave	21 ns	-
6	SCLK time	Slave	70 ns	

© Copyright 2013 WIZnet Co., Ltd. All rights reserved

4. Dimensions

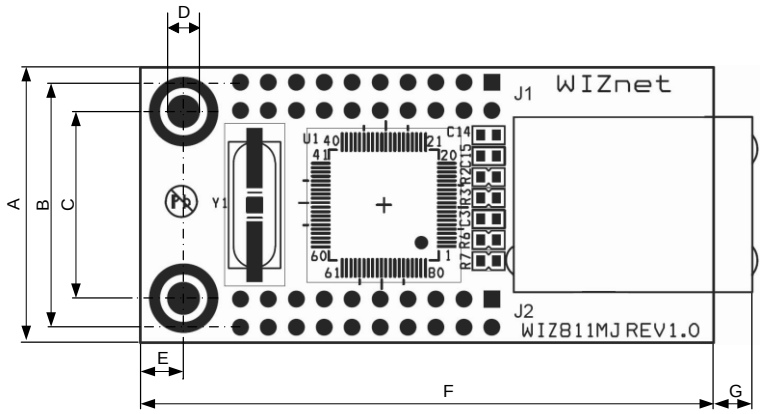

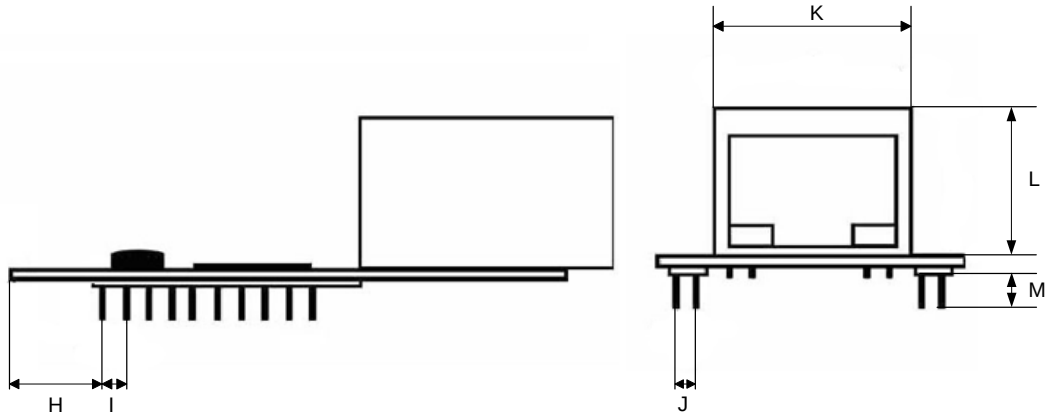

Symbols	Dimensions (mm)
A	25.00
B	22.46
C	17.00
D	3.00
E	4.00
F	52.00
G	3.20
H	9.00
I	2.54
J	2.54
K	15.90
L	13.50
M	6.00

© Copyright 2013 WIZnet Co., Ltd. All rights reserved

5. Schematic

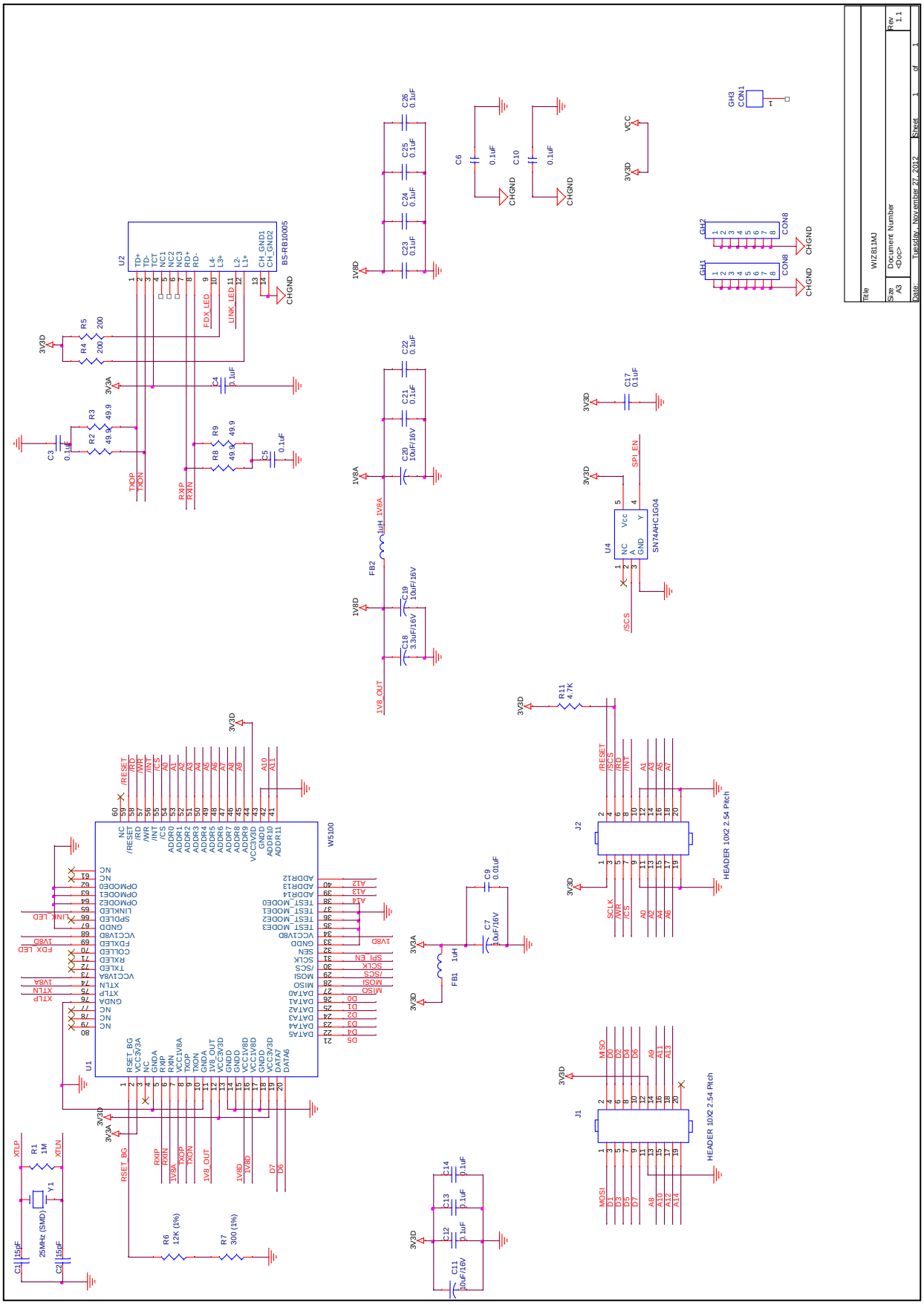

© Copyright 2013 WIZnet Co., Ltd. All rights reserved

6. Partlist

Item	Q.ty	Reference	Part	Tech. Characteristics	Package
1	2	C1,C2	15pF	50V-20% Ceramic	CASE 0603
2	15	C3,C4,C5,C6, C10,C12,C13 ,C14, C17,C21,C22, C23,C24,C25, C26	0.1uF	50V-20% Ceramic	CASE 0603
3	4	C7,C11,C19,C 20	10uF/16V	16Vmin 10%	EIA/IECQ 3216
4	1	C9	0.01uF	50V-20% Ceramic	CASE 0603
5	1	C18	3.3uF/16V	16Vmin 10%	EIA/IECQ 3216
6	2	FB1,FB2	1uH Chip Ferrite Inductor		CASE 0805
7	2	J1,J2	2X10 20PIN 2.54mm DIP STRAIGHT Header	2 X 10 2.54mm pitch	
8	1	R1	1M	1/10W-5% SMD	CASE 0603
9	4	R2,R3,R8,R9	49.9 (1%)	1/10W-1% SMD	CASE 0603
10	2	R4,R5	200	1/10W-5% SMD	CASE 0603
11	1	R6	12K (1%)	1/10W-1% SMD	CASE 0603
12	1	R7	300 (1%)	1/10W-1% SMD	CASE 0603
13	1	R11	4.7K	1/10W-5% SMD	CASE 0603
14	1	U1	W5100	WIZnet Hardware TCP/IP	LQFP80
15	1	U2	BS-RB10005	Transformer + RJ45	
16	1	U4	74AHC1G04GW	Inverting Buffer	TSSOP5
17	1	Y1	25MHz (SMD)	SMD Type, CL=18pF, Industrial	SX-1
18	1		PCB	WIZ811MJ REV1.1 1.6T 4LAYER	

© Copyright 2013 WIZnet Co., Ltd. All rights reserved