WIZ812MJ Datasheet

(Ver. 1.2)

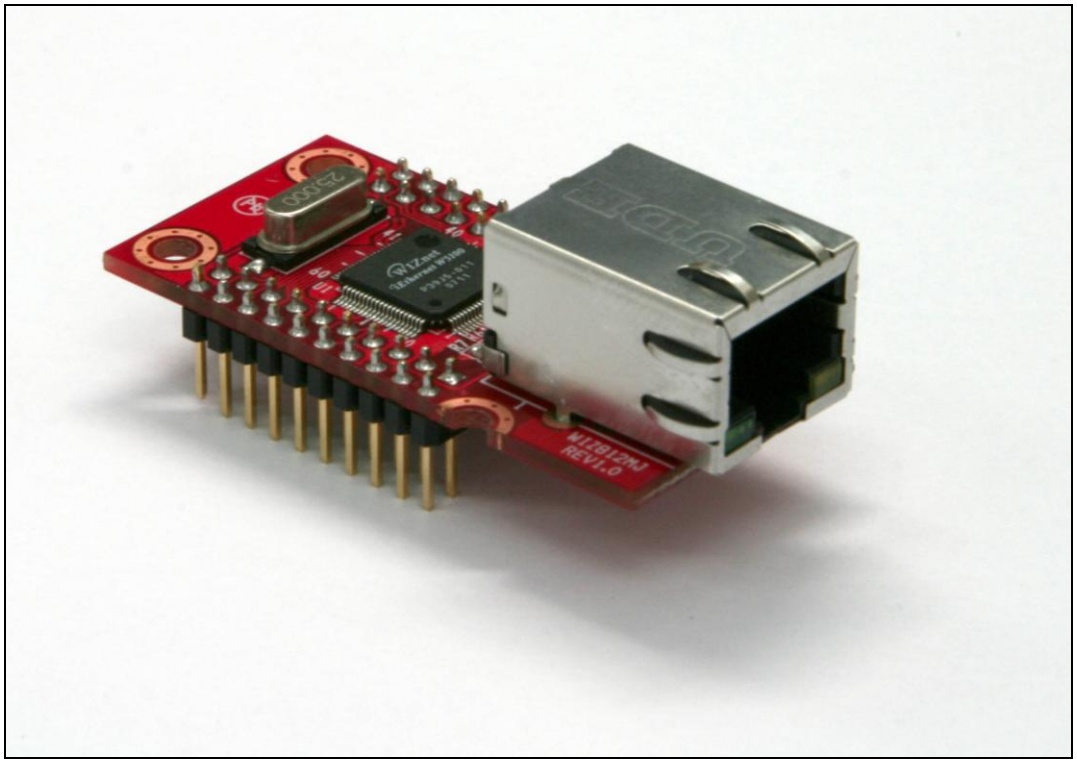

©2013 WIZnet Co., Ltd. All Rights Reserved.
For more information, visit our website at www.wiznet.co.kr

Document History Information

Revision	Data	Description
Ver. 1.0	September 17, 2008	Release with WIZ812MJ Launching
Ver. 1.1	January 28, 2009	Added temperature specification
Ver. 1.2	January 28, 2013	Hardware revision(Rev1.1) Changed operation temperature range, partlist and schematic

© Copyright 2013 WIZnet Co., Ltd. All rights reserved

WIZnet's Online Technical Support

If you have something to ask about WIZnet Products, Write down your question on Q&A Board in WIZnet website (www.wiznet.co.kr). WIZnet Engineer will give an answer as soon as possible.

© Copyright 2013 WIZnet Co., Ltd. All rights reserved

Table of Contents

1. Introduction 5

1.1. Features 5
1.2. Block Diagram 5
1.3. Difference between WIZ811MJ and WIZ812MJ 6

2. Pin Assignments & descriptions 7

2.1. Pin Assignments 7
2.2. Power & Ground 8
2.3. MCU Interfaces 8
2.4. Miscellaneous Signals 9

3. Timing Diagrams 10

3.1. Reset Timing 10
3.2. Register/Memory READ Timing 10
3.3. Register/Memory WRITE Timing 11
3.4. SPI Timing 11

4. Dimensions 12

5. Schematic 13

6. Partlist 14

© Copyright 2013 WIZnet Co., Ltd. All rights reserved

1. Introduction

WIZ812MJ is the network module that includes W5100 (TCP/IP hardwired chip, include PHY), MAG-JACK (RJ45 with X'FMR) with other glue logics. It can be used as a component and no effort is required to interface W5100 and Transformer. The WIZ812MJ is an ideal option for users who want to develop their Internet enabling systems rapidly.
For the detailed information on implementation of Hardware TCP/IP, refer to the W5100 Datasheet.

WIZ812MJ consists of W5100 and MAG-JACK.

- TCP/IP, MAC protocol layer: W5100
- Physical layer: Included in W5100
- Connector: MAG-JACK(RJ45 with Transformer)

1.1. Features

- Supports 10/100 Base TX
- Supports half/full duplex operation
- Supports auto-negotiation and auto cross-over detection
- IEEE 802.3/802.3u Compliance
- Operates 3.3V with 5V I/O signal tolerance
- Supports network status indicator LEDs
- Includes Hardware Internet protocols: TCP, IP Ver.4, UDP, ICMP, ARP, PPPoE, IGMP
- Includes Hardware Ethernet protocols: DLC, MAC
- Supports 4 independent connections simultaneously
- Supports MCU bus Interface and SPI Interface
- Supports Direct/Indirect mode bus access
- Supports Socket API for easy application programming
- Interfaces with two 2.54mm pitch 2 x 10 header pin
- Temperature :

  [PCB rev1.0] : 0 ~ 70℃ (Operation), -40 ~ 85℃ (Storage)
  [PCB rev1.1] : -40 ~ 85℃ (Operation), -40 ~ 85℃ (Storage)

1.2. Block Diagram



© Copyright 2013 WIZnet Co., Ltd. All rights reserved

1.3. Difference between WIZ811MJ and WIZ812MJ

WIZ811MJ	WIZ812MJ
	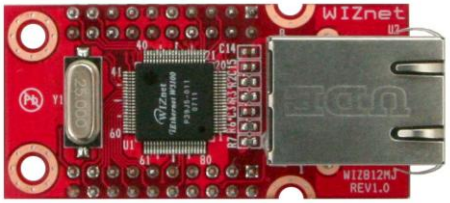
Two 2.54mm pitch 10x2 header	The same pin-header is mounted but pin description is different J2:9 GND -> RX_LED J2:10 GND -> TX_LED J2:19 GND -> /LINKLED
Two PCB Through Hole(Ø3.00mm)	Four PCB Through Hole(Ø3.00mm)
55.5 x 25 x 23.5mm (W x H x D)	The same size
LINKLED : Active low in link state indicates a good status for 10/100M. It is always ON when the link is OK and it flashes while in a TX or RX state.	**/LINKLED :** Active low in link state indicates a good status for 10/100M. It is always ON when the link is OK. It does not flashes while in a TX or RX state.
	ACT_LED : Active low in active state indicates a good status for 10/100M. It is always ON when the link is OK and it flashes while in a TX or RX state.

© Copyright 2013 WIZnet Co., Ltd. All rights reserved

2. Pin Assignments & descriptions

2.1. Pin Assignments

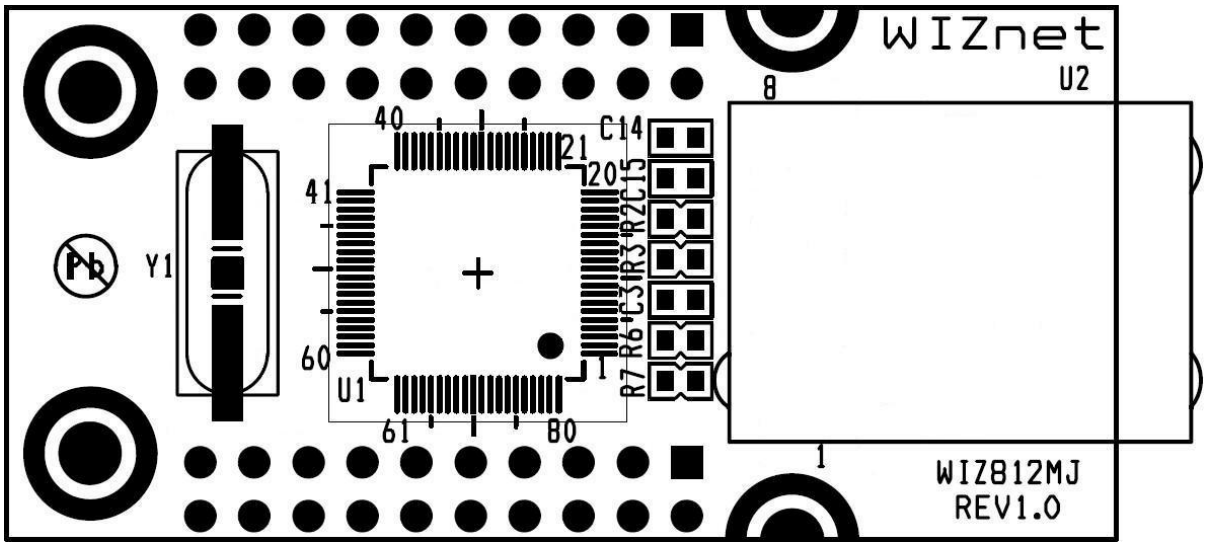

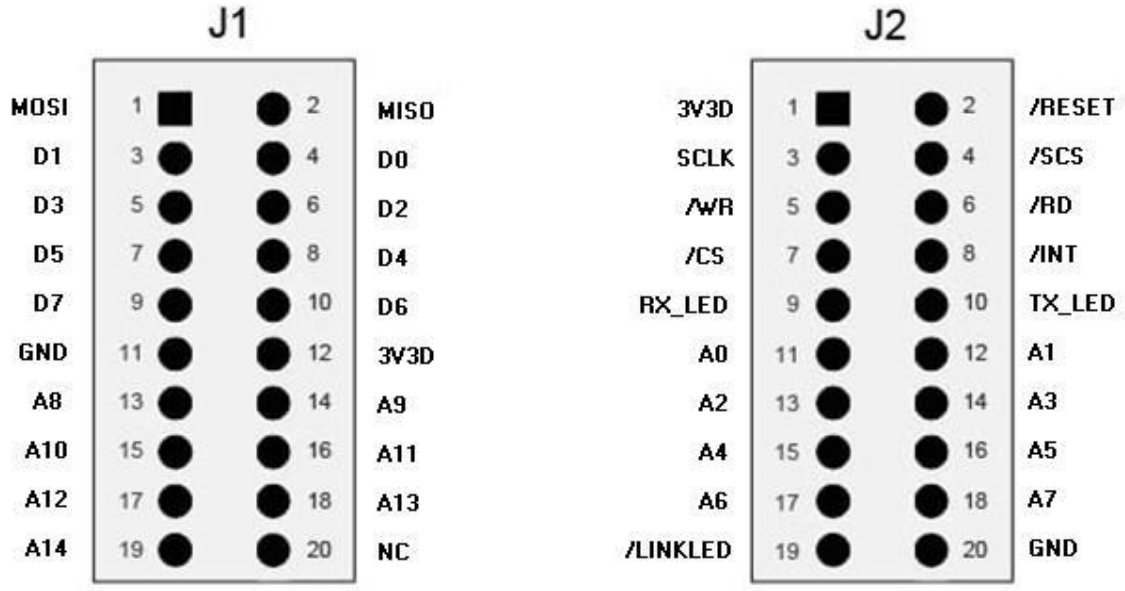

© Copyright 2013 WIZnet Co., Ltd. All rights reserved

I : Input **O : Output**
I/O : Bi-directional Input and output **P : Power**

2.2. Power & Ground

Symbol	Type	Pin No.	Description
3V3D	**P**	J1:12 , J2:1	**Power** : 3.3 V power supply
GND	**P**	J1:11, J2:20	**Ground**

2.3. MCU Interfaces

Symbol	Type	Pin No.	Description
SCLK	**I**	J2:3	**SCLK(Serial Clock)** This pin is used to SPI Clock Signal pin.
/SCS	**I**	J2:4	**/SCS (Slave Select)** * This pin is used to SPI Slave Select signal Pin. This pin controls SPI_EN signal of W5100. When /SCS signal assert low, W5100 drive SPI mode by SPI_EN signal toggled high.
MOSI	**I**	J1:1	**MOSI (Master Out Slave In)** * This pin is used to SPI MOSI signal pin.
MISO	**I/O**	J1:2	**MISO (Master In Slave Out)** * This pin is used to SPI MISO signal pin.
A14~A8	**I**	J1:13 ~ J1:19	**Address** Used as Address[14-8] pin
A7~A0	**I**	J2:11 ~ J2:18	**Address** Used as Address[7-0] pin
D7~D0	**I/O**	J1:3 ~ J1:10	**Data** 8 bit-wide data bus
/CS	**I**	J2:7	**Module Select** : Active low. /CS of W5100
/RD	**I**	J2:6	**Read Enable** : Active low. /RD of W5100
/WR	**I**	J2:5	**Write Enable** : Active low /WR of W5100
/INT	**O**	J2:8	**Interrupt** : Active low After reception or transmission it indicates that the W5100 requires MCU attention. By writing values to the Interrupt Status Register of W5100 the interrupt will be cleared. All interrupts can be masked by writing values to the IMR of W5100 (Interrupt Mask Register). For more details refer to the W5100 Datasheet

© Copyright 2013 WIZnet Co., Ltd. All rights reserved

2.4. Miscellaneous Signals

Symbol	Type	Pin No.	Description
/RESET	**I**	J2:2	**Reset :** This pin is active low input to initialize or re-initialize W5100. By asserting this pin low for at least 2us, all internal registers will be re-initialized to their default states.
RX_LED	**O**	J2:9	**RX_LED :** Receive activity LED Active low indicates the presence of receiving activity.
TX_LED	**O**	J2:10	**TX_LED :** Transmit activity LED Active low indicates the presence of transmitting activity.
/LINKLED	**O**	J2:19	**LINKLED :** Active low in link state indicates a good status for 10/100M. It is always ON when the link is OK. It does not flashes while in a TX or RX state.
NC	-	J1 : 20	Not Connect

© Copyright 2013 WIZnet Co., Ltd. All rights reserved

3. Timing Diagrams

WIZ812MJ provides following interfaces of W5100.
-. Direct/Indirect mode bus access
-. SPI access

3.1. Reset Timing

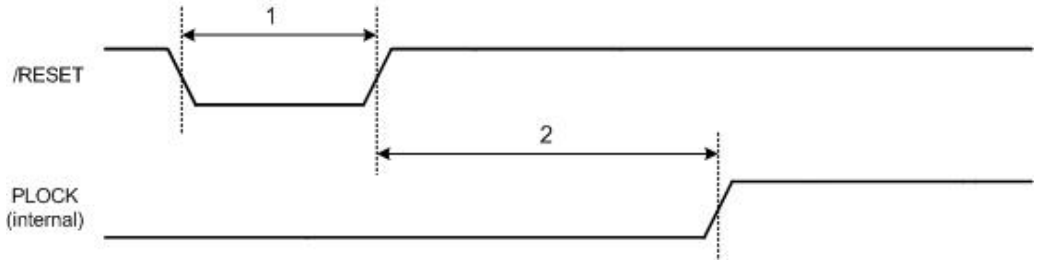

	Description	Min	Max
1	Reset Cycle Time	2 us	-
2	/RESET to internal PLOCK	-	10 ms

3.2. Register/Memory READ Timing

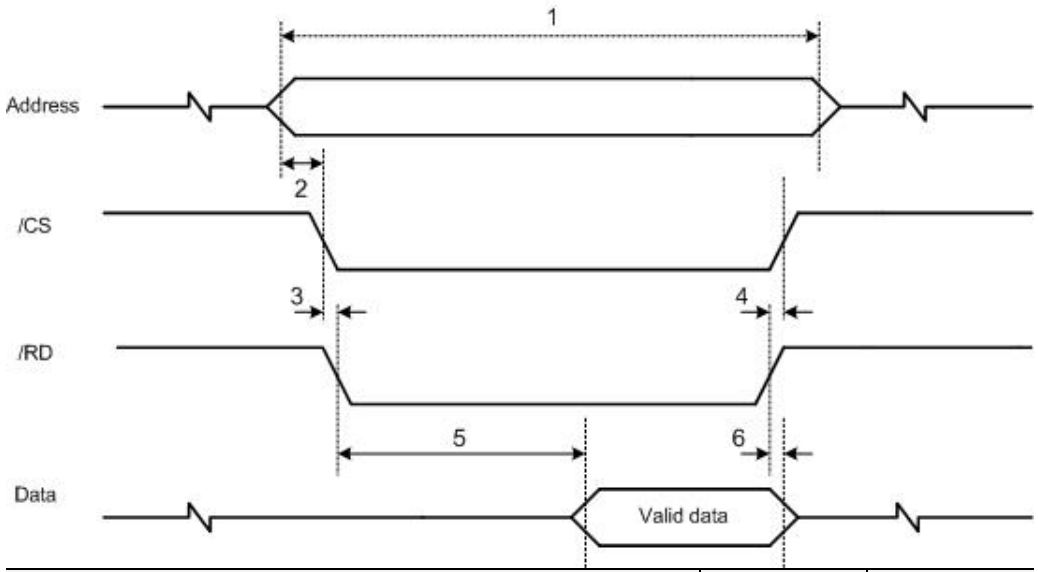

	Description	Min	Max
1	Read Cycle Time	80 ns	-
2	Valid Address to /CS low time	8 ns	-
3	/CS low to /RD low time	-	1 ns
4	/RD high to /CS high time	-	1 ns
5	/RD low to Valid Data Output time	-	80 ns
6	/RD high to Data High-Z Output time	-	1 ns

© Copyright 2013 WIZnet Co., Ltd. All rights reserved

3.3. Register/Memory WRITE Timing

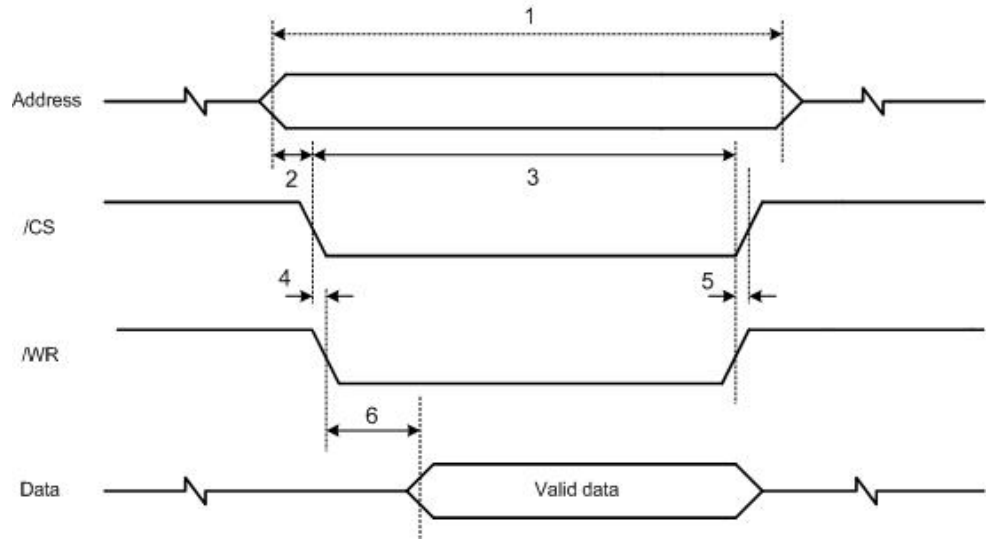

	Description	Min	Max
1	Write Cycle Time	70 ns	-
2	Valid Address to /CS low time	7 ns	-
3	/CS low to /WR high time	70 ns	-
4	/CS low to /WR low time	-	1 ns
5	/WR high to /CS high time	-	1 ns
6	/WR low to Valid Data time	-	14 ns

3.4. SPI Timing

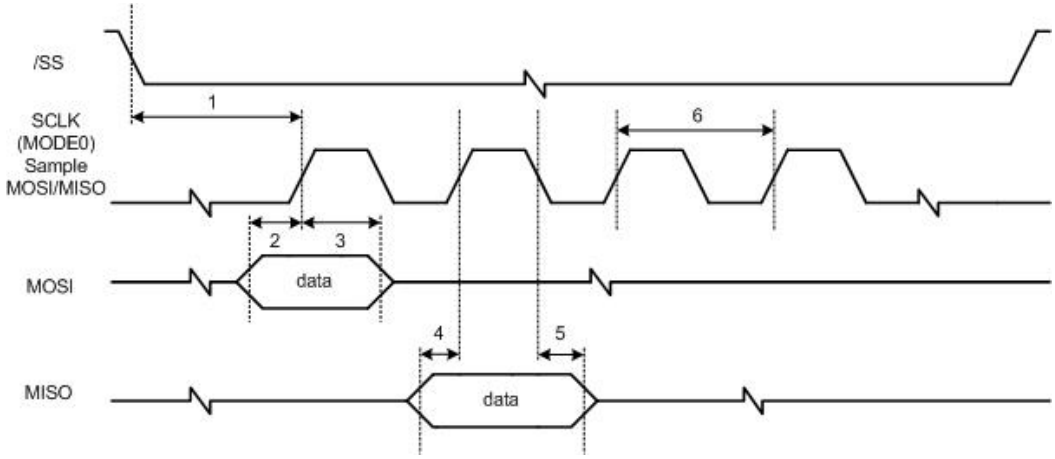

	Description	Mode	Min	Max
1	/SS low to SCLK	Slave	21 ns	-
2	Input setup time	Slave	7 ns	-
3	Input hold time	Slave	28 ns	-
4	Output setup time	Slave	7 ns	14 ns
5	Output hold time	Slave	21 ns	-
6	SCLK time	Slave	70 ns	

© Copyright 2013 WIZnet Co., Ltd. All rights reserved

4. Dimensions

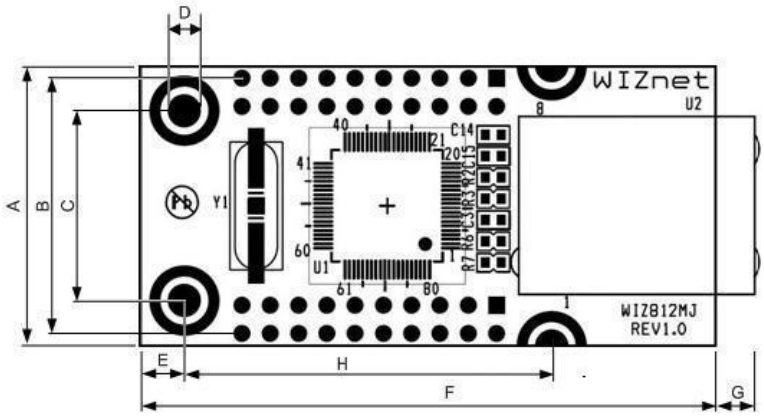

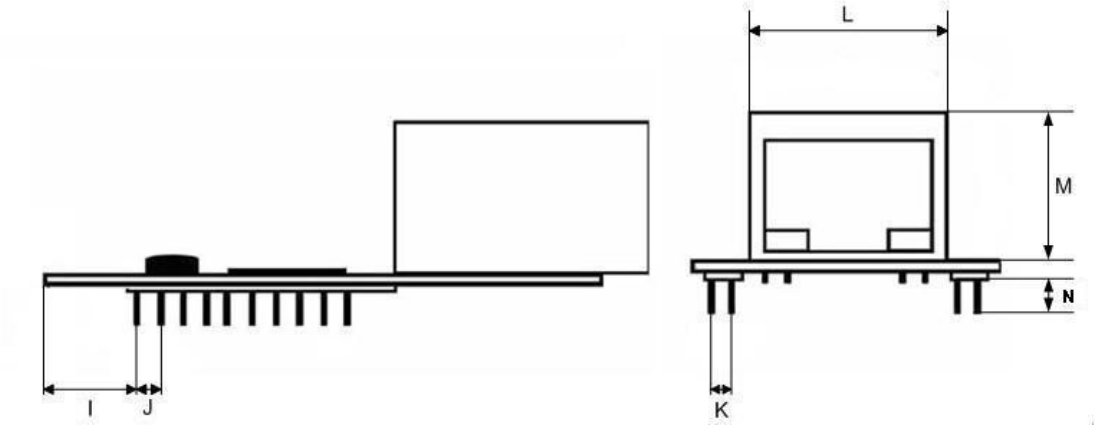

Symbols	Dimensions (mm)
A	25.00
B	22.86
C	17.00
D	3.00
E	4.00
F	52.00
G	3.20
H	33.02
I	9.00
J	2.54
K	2.54
L	15.90
M	13.50
N	6.00

© Copyright 2013 WIZnet Co., Ltd. All rights reserved

5. Schematic

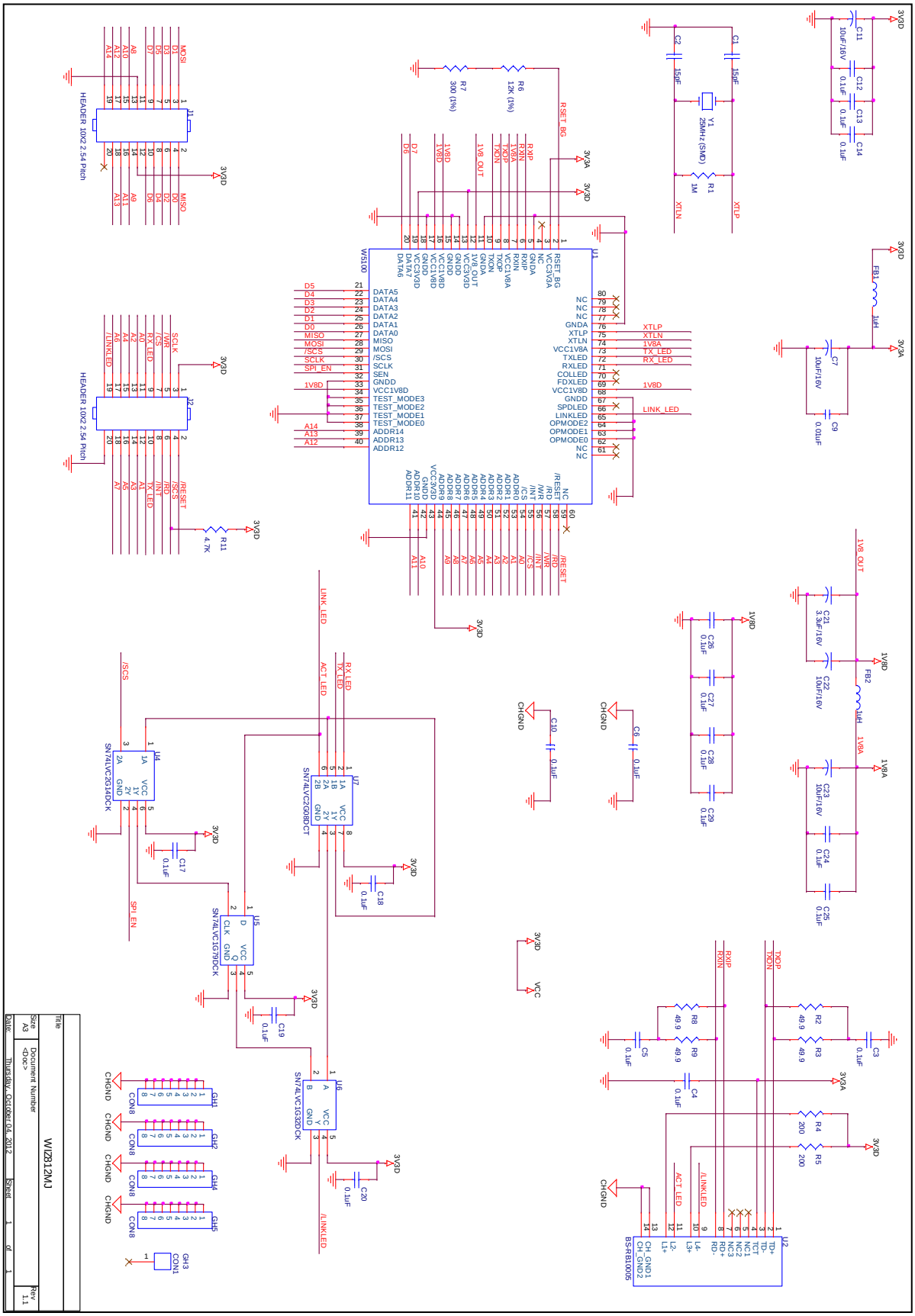

© Copyright 2013 WIZnet Co., Ltd. All rights reserved

6. Partlist

Item	Q.ty	Reference	Part	Tech. Characteristics	Package
1	2	C1,C2	15pF	50V-20% Ceramic	CASE 0603
2	18	C3,C4,C5,C6,C10, C12,C13,C14,C17, C18,C19,C20,C24, C25,C26,C27,C28, C29	0.1uF	50V-20% Ceramic	CASE 0603
3	4	C7,C11,C22,C23	10uF/16V	16Vmin 10%	EIA/IECQ 3216
4	1	C21	3.3uF/16V	16Vmin 10%	EIA/IECQ 3216
5	1	C9	0.01uF	50V-20% Ceramic	CASE 0603
6	2	FB1,FB2	1uH Ferrite Inductor		CASE 0805
7	2	J1,J2	2X10 2.54mm DIP STRAIGHT Header	2 X 10 2.54mm pitch	
8	1	R1	1M	1/10W-5% SMD	CASE 0603
9	4	R2,R3,R8,R9	49.9 (1%)	1/10W-1% SMD	CASE 0603
10	2	R4,R5	200	1/10W-5% SMD	CASE 0603
11	1	R6	12K (1%)	1/10W-1% SMD	CASE 0603
12	1	R7	300 (1%)	1/10W-1% SMD	CASE 0603
13	1	R11	4.7K	1/10W-5% SMD	CASE 0603
14	1	U1	W5100	WIZnet Hardware TCP/IP	LQFP80
15	1	U2	BS-RB10005	Transformer + RJ45	
16	1	U4	SN74LVC2G14DCK	Dual Inverting Buffer	SC70-6
17	1	U5	SN74LVC1G79DCK	D-type Flip Flop (vendor : TI)	SC70-5
18	1	U6	SN74LVC1G32DCK	OR-Gate (vendor : TI)	SC70-5
19	1	U7	SN74LVC2G08DCT	Dual AND-Gate (vendor : TI)	SM8
20	1	Y1	25MHz (SMD)	SMD Type, Industrial	SX-1
21	1		PCB REV1.1	FR4, 1.6T, 4Layer	

© Copyright 2013 WIZnet Co., Ltd. All rights reserved